Vertical Lifting Clamp TSHP/TSHP-A

Product information

Clamp for vertical lifting, handling and transporting of Holland Profile (HP) shipbuilding structures, steel plates and structures. Also useful as a “big-jaw” opening clamp. Lifting of longer sections should be done with a spreader beam.
Model TSHP: Standard clamp
Model TSHP-A : Equiped with adjustable Jaw opening.

Features:

- Standard with 3 pivots for extra powerful clamping force
- Easy handling of workpieces in and out of lathe due to extra small W-dimensions
- Lightweight design for easy handling
- Tough quality heavy duty welded shell body
- Always equipped with a safety mechanism, ensuring the clamp does not slip when lifting force is applied and when load is being lowered
- Clamp is locked in closed as well as open position
- Maintenance-friendly, easy to exchange parts which are available upon request

Marking: According to standard, CE-marked, Type, serial number, WLL, Jaw opening.
Temperature range: - 40°C to +100°C
Standard: EN 13155
Note: Hardness level of the material surface may not exceed 37 HRC (345 HB, 1166 N/mm2).
Warning: Min. load is 10% of max. WLL.

Part code	Code	WLL ton	Jaw width mm	S mm	T mm	U mm	V mm	W mm	X mm	Y mm	Weight kg	Delivery time
502100100800640	1 TSHP	1	0-80	207	70	520	257	41	68	17	19	7
502100151550640	1.5 TSHP-A	1.5	0-155	160	70	523	256-333	62	66	16	18	7
502100150800640	1.5 TSHP	1.5	0-80	207	70	520	257	41	68	16	19	7
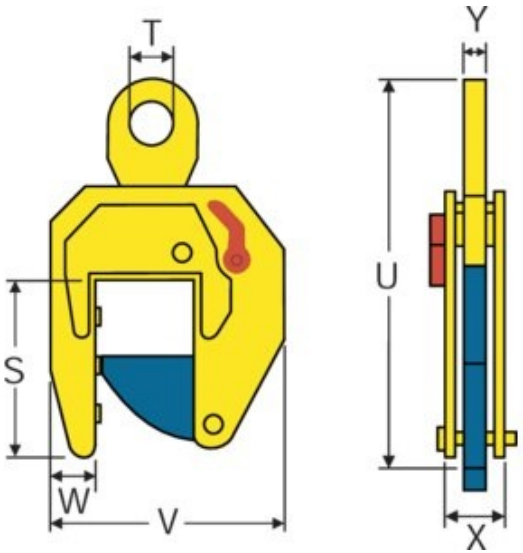
Blueprint